# Universal Process Indicator

## neuro 200 / neuro 200L

Universal Input with inbuilt 24 VDC Transmitter Supply
32 Point User Defined Linearization
2 x Alarm Outputs & Retransmission Analog Output
1/16 DIN (48x48) & 1/4 DIN (96x96) Size Options

**Process Precision Instruments**
Vasai Road (E), Dist. Palghar - 401210,
Maharashtra, India

www.ppiindia.net

**48 x 48**

**96 x 96**

## Salient Features

- Available in 1/16 DIN (48x48) & 1/4 DIN (96x96) Sizes
- 2 Rows of Bright Green 7-Segment LED Display, Designed for Sunlight Readability (0.36" for 48x48 & 0.8" for 96x96)
- Universal Input :
  J, K, T, R, S, B, N Thermocouples, RTD Pt100, DC mA/mV/V
- 24VDC @ 30mA Excitation Power for Transmitters
- Programmable Range / Resolution for DC mA/mV/V Inputs
- Programmable Input Signal Conditioning (Digital Filter & Zero Offset)
- 32 Point User Defined Linearization for DC mA/mV/V Inputs
- Facility to View & Store Min/Max Process Value
- °C / °F Units Selection for Thermocouples / RTD Pt100 Inputs
- Selectable Process Value Units indication on Lower Readout
- Front Panel Alarm Acknowledge Key
- 2 Programable Alarms with Optional Relay Outputs
- Optional PV Retransmission Output
- RS485 MODBUS RTU Serial Communication Port
- Universal Supply Voltage : 85~264 VAC, 50/60 Hz
- DIN Standard Dimensions (mm) :
  **neuro 200** : 48(H) X 48(W) X 94(D)
  **neuro 200L** : 96(H) X 96(W) X 84(D)
- Available in Flame-proof (Gas Group IIA & IIB) Enclosure

## General Information

| | |
|---|---|
| **Product Type** | Universal Process Indicator |

**Ordering Code**

**n200-** □-□-□-□

| | |
|---|---|
| Size | **48** : 48 x 48 **96** : 96 x 96 |
| Output 1 (Retransmission) | **0** : None **1** : mA **2** : V |
| Output 2 (Alarm-1) | **0** : None **1** : Relay **2** : SSR |
| Output 3 (Alarm-2) | **0** : None **1** : Relay **2** : SSR |

**Example Code : n200-48-1-1-0**
Size : 48 x 48
Ouput 1 : mA
Output 2 : Relay
Output 3 : None

| | |
|---|---|
| **Quantity** | 1 Unit |
| **Accessories** | (Optional) USB to RS485 Convertor |

## Operator Interface

| | |
|---|---|
| Display | **neuro 200** : 2 Rows of 4 Digits, 0.36” Height, Luminous Green, 7 Segment LED<br>**neuro 200L** : 2 Rows of 4 Digits, 0.8” Height, Luminous Green, 7 Segment LED |
| Status Indicators | 8 Red LEDs |
| Keys | 4 Tactile Switches<br>PAGE, DOWN, UP, ENTER |

## PV Input

| | |
|---|---|
| Sensor/Signal<br>(User Configurable) | **Thermocouple** : J, K, T, R, S, B, N<br>**RTD** : Pt100, 3 wire<br>**DC Linear** : 0 - 20 mA, 4 - 20 mA,<br>0 - 80 mV, 0 - 1.25 V,<br>0 - 5 V, 0 - 10 V, 1 - 5 V |
| Accuracy | **Thermocouples** : ± 0.2% of reading for J, K, T (Excluding CJC)<br>± 0.4% of reading for R, S, B, N (Excluding CJC)<br>CJC : ± 1.5 °C (Specified over 18 to 37 °C)<br>**RTD Pt100** : ± 0.2% of reading<br>Lead Resistance Compensation : Max. 5Ω per Lead for 3-wire RTD<br>**DC mV/V/mA** : ± 0.1% of reading |
| Display Resolution | **Thermocouples** : 1°C Fixed<br>**RTD Pt100** : 0.1 / 1°C (Selectable)<br>**DC mV/V/mA** : 0.001 / 0.01 / 0.1 / 1 Counts (Selectable) |
| Range | Refer Table-1 for Thermocouples & RTD Inputs<br>Adjustable from -1999 to 9999 Counts for DC mA/mV/V |
| Zero Offset | User Adjustable over Full Range |
| ADC | 16 Bit (± 32,768 Counts), Sigma-Delta (ΣΔ) |
| Sampling Time | 200mS (5 Samples per Second) |
| Input Resistance | > 8 MΩ for Thermocouples, RTD Pt100 & mV Inputs<br>> 47 KΩ for Voltage Input<br>249 Ω Precision Shunt for mA Input |
| Common Mode Rejection | > 100dB at 50/60 Hz |
| Input Protection | ESD : 8KV EFT : 2KV Surge : 1KV |
| Input Conditioning | First Order Analog R-C Low-Pass Filter & Settable Digital Low-Pass Filter |

## Excitation Power

| | |
|---|---|
| Ratings | 24 V (±10%) @ 30 mA (Standard)<br>Note : For 2-wire Transmitters (4-20 mA), the Excitation Power can source only one transmitter. |

## Alarms

| | |
|---|---|
| Numbers | 2, Independent |
| Programmable Parameters | **Type** : Process Low, Process High<br>**Hysteresis** : 1 to 3000 Unit Counts<br>**Inhibit** : No, Yes<br>**Logic** : Normal, Reverse<br>**Latch** : No, Yes |
| Outputs (Optional) | Relay Change-over Contacts or SSR Drive (Factory Settable)<br>Output-2 for Alarm-1, Output-3 for Alarm-2 |

## Retransmission (Output-1)

| | |
|---|---|
| Signal Type | Standard : DC Current (0/4-20 mA)<br>Optional : DC Volts (0-5/10 V) |
| PV Range | User Settable Through 'Range Low' and 'Range High' Parameters |

## Electrical Specifications for Outputs

| | |
|---|---|
| Relay | Contact Type : Potential-free Change-over Contacts<br>Contact Rating : 5A Resistive @ 250 VAC<br>Contact Life : > 5,00,000 Operations at Rated Voltage / Current |
| SSR Drive | 12 VDC @ 30 mA |
| DC Linear | Current : 0-20mA, 4-20mA (into 500Ω Maximum)<br>Voltage : 0-5V, 0-10V (into 1KΩ Minimum) |
| Isolation | Only for **neuro 200L** : All Outputs are Isolated from Power, Analog Inputs & RS485 Port<br>Rating : 1500VAC for 1 second or 250VAC continuous Isolation. |

## Serial Communication

| | |
|---|---|
| Port | RS485, 2-wire, Half Duplex, Start-Stop Synchronized |
| Protocol | MODBUS RTU |
| Baud Rate | Settable : 4800, 9600, 19200 bps |
| ID | 1 to 127 |
| Parity | Settable : None, Even, Odd |
| Max. Units per Loop | 31 |
| Max. Distance | 1200 Meters |

## Power Supply

| | |
|---|---|
| Type | Switch Mode (SMPS) |
| Line Voltage | 85~264 VAC, 50/60Hz |
| Consumption | 5 VA Max |

## Physical

| | | |
|---|---|---|
| Mounting | Plug-in with Panel Mounting Clamps | |
| Overall Dimensions | **neuro 200** : 48(H) X 48(W) X 94(D), mm | **neuro 200L** : 96(H) X 96(W) X 84(D), mm |
| Panel Cutout | **neuro 200** : 45(H) X 45(W), mm | **neuro 200L** : 92(H) X 92(W), mm |
| Terminals | Screw Type, Pluggable | |
| Weight | **neuro 200** : 200 gm, Approx. | **neuro 200L** : 400 gm, Approx |

## Environmental

| | |
|---|---|
| Operating Ambient | 0 to 55°C & 5 to 90%RH Non-condensing |
| Storage Temperature | -10 to +70°C |
| Atmospheres | Not Suitable for use in Corrosive or Explosive Atmospheres. The Panel in which the Instrument is Mounted must be free of Electrically Conductive Pollution. |

## Terminations

**neuro 200 : 48x48**

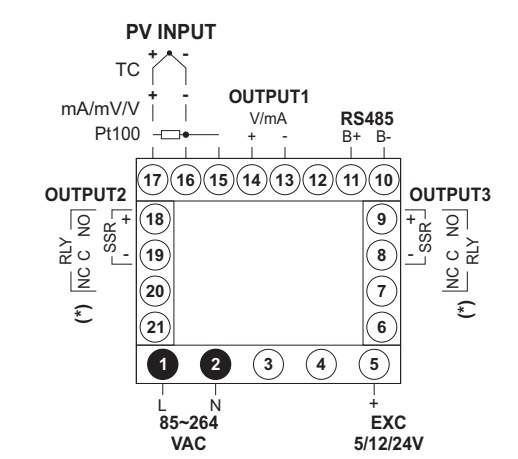


(*) 3 Terminals for Output 2 & Output 3 in Relay Configuration

**neuro 200L : 96x96**

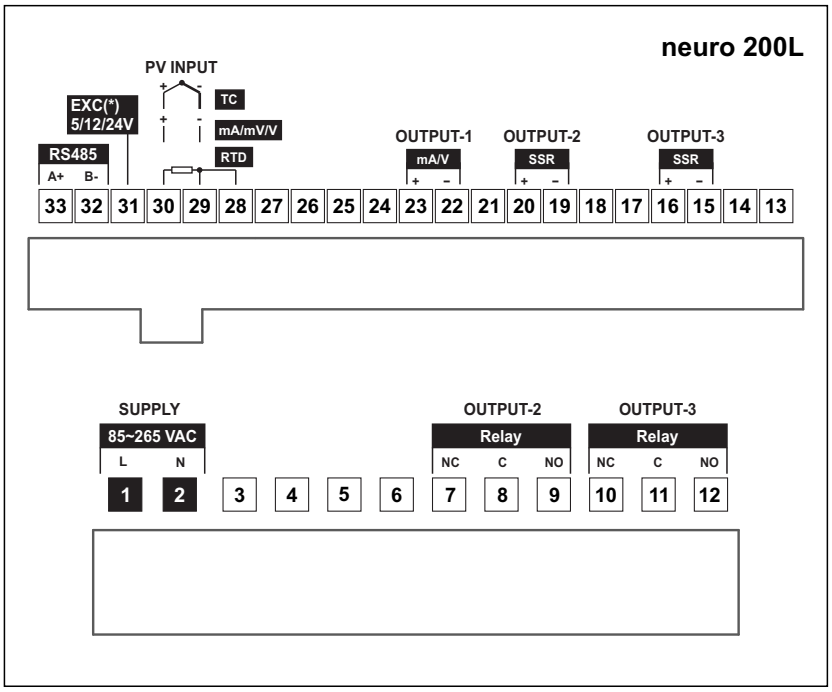

| Table-1 : Thermocouple & RTD Input Ranges | |
|---|---|
| **Input Type** | **Range (Min. to Max.)** |
| 2 / 3-wire, RTD Pt100 | -199.9 to +850.0 °C / -328.0 to +1562.0 °F |
| Type J Thermocouple (Fe-K) | 0.0 to +960.0°C / +32.0 to +1760.0°F |
| Type K Thermocouple (Cr-Al) | -200.0 to +1376.0°C / -328.0 to +2508.0°F |
| Type T Thermocouple (Cu-Con) | -200.0 to +387.0°C / -328.0 to +728.0°F |
| Type R Thermocouple (Pt / Pt-Rh13%) | 0.0 to +1771.0°C / +32.0 to +3219.0°F |
| Type S Thermocouple (Pt / Pt-Rh10%) | 0.0 to +1768.0°C / +32.0 to +3214.0°F |
| Type B Thermocouple (Pt-Rh6% / Pt-Rh30%) | 0.0 to +1826.0°C / +32.0 to +3318.0°F |
| Type N Thermocouple (NiCrSi / NiSi) | 0.0 to +1314.0°C / +32.0 to +2397.0°F |

**Process Precision Instruments** (An ISO 9001 : 2008 Company)

101, Diamond Industrial Estate, Navghar, Vasai Road (E), Dist. Palghar - 401210, Maharashtra, India

Sales : 8208199048 / 8208141446 Support : 07498799226 / 08767395333

sales@ppiindia.net www.ppiindia.net