Delta Pro

PPI
The Perfection Experts

2-in-1 Self Tune
Universal PID Temperature Controller
(RTD Pt100 & J / K / T / R / S / B / N Thermocouples)

User Manual

CONTENTS

1. FRONT PANEL LAYOUT 1
2. BASIC OPERATION 3
3. PAGES & PARAMETERS 7
4. PAGE-10 : INSTALLATION PARAMETERS 9
5. PAGE-11 : CONFIGURATION PARAMETERS 11
6. PAGE-12 : PID CONTROL PARAMETERS 13
7. PAGE-13 : AUXILIARY OUTPUT-1 PARAMETERS 15
8. PAGE-14 : AUXILIARY OUTPUT-2 PARAMETERS 17
9. MECHANICAL INSTALLATION 18
10. ELECTRICAL CONNECTIONS 20

Section 1
FRONT PANEL LAYOUT

The controller front panel comprises of digital readouts, LED indicators and membrane keys as shown in Figure 1.1 below.

Figure 1.1

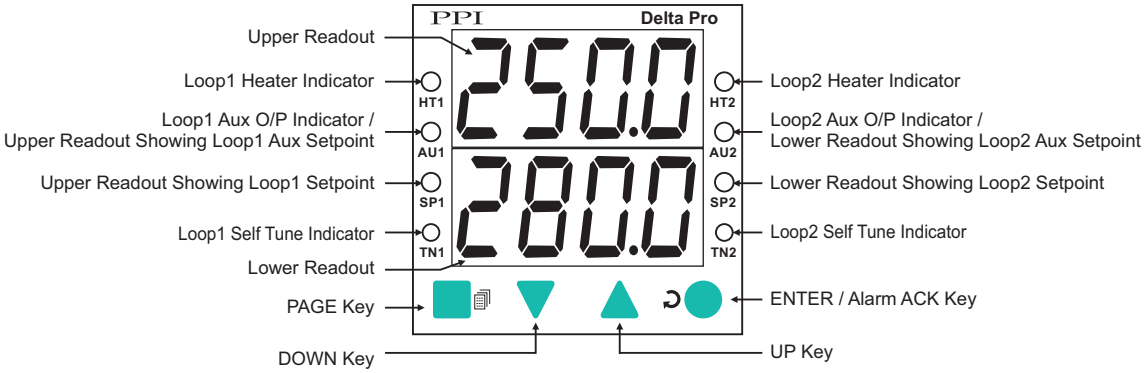

READOUTS

The Upper Readout is a 4 digit, 7-segment bright green LED display and usually displays the Temperature Value for Loop1. In Operator Mode, the Upper Readout shows and permits editing of Control Setpoint and/or Auxiliary Setpoint for Loop1. In set-up mode, the Upper Readout displays parameter values.

The Lower Readout is a 4 digit, 7-segment bright green LED display and usually displays the Temperature Value for Loop2. In Operator Mode, the Lower Readout shows and permits editing of Control Setpoint and/or Auxiliary Setpoint for Loop2. In set-up mode, the Lower Readout displays the prompts for the parameters.

INDICATORS

There are eight front panel LED indicators to show various statuses for each Loop. The Table 1.1 and Table 1.2 below list each LED indicator (identified by the front panel legend), the position on the front panel and the associated status it indicates for Loop1 and Loop2, respectively.

Table 1.1

Indicator	Function
HT1, HT2	Heater On/Off Status for Loop1 & Loop2, respectively.
AU1, AU2	Main Mode : Auxiliary Output On/Off Status for Loop1 & Loop2, respectively. Setup Mode : Flashes while the upper or lower readout is showing the Aux setpoints for Loop1 & Loop2, respectively.
SP1, SP2	SP1 glows when upper readout shows Setpoint for Loop1. SP2 glows when lower readout shows Setpoint for Loop2.
TN1, TN2	TN1 flashes when Loop1 is performing Self Tune. TN2 flashes when Loop2 is performing Self Tune.

KEYS

There are four tactile keys provided on the front panel for configuring the controller, setting-up the parameter values and selecting operation modes. The Table 1.3 below details the key functions.

Table 1.3

Symbol	Key	Function
	PAGE	Press to enter or exit set-up mode.
	DOWN	Press to decrease the parameter value. Pressing once decreases the value by one count; keeping pressed speeds up the change.
	UP	Press to increase the parameter value. Pressing once increases the value by one count; keeping pressed speeds up the change.
	ENTER	Press to store the set parameter value and to scroll to the next parameter on the PAGE.

Section 2
BASIC OPERATIONS

POWER-UP

Upon power-up the controller executes the following sequence of operations.

- Checks for Sensor Fault. If the connected sensor type is RTD Pt100 and the selected sensor type is any of thermocouples or vice-a-versa; the controller displays sensor fault massage (S.FLt) on upper readout for Loop1 & on lower readout for Loop2. The user is advised to take necessary corrective action and press Enter key to acknowledge the fault.
- All displays and indicators are lit on for approximately 3 seconds to check any display segment failure.
- Displays controller model name on the Upper Readout and the firmware version on the Lower Readout, for approximately 1 second. This helps user to verify features and refer to the correct documents versions.

MAIN DISPLAY MODE

After the power-up display sequence, the Upper Readout and Lower Readout start showing the measured Temperature values for Loop1 and Loop2, respectively. This is called the MAIN display mode and this is the one that shall be used most often.

OPERATOR MODE

Adjusting the Control and Auxiliary Setpoints for Loop1 and Loop2

The Control Setpoint and Auxiliary Setpoint for Loop1and Loop2 can be directly adjusted on the Upper and Lower readout, respectively, while the controller is in the MAIN display mode. The Control and Auxiliary Setpoint adjustment for Loop1and Loop2 is permitted only if they are not locked via the parameter 'Setpoint Locking' in PAGE-11. If not locked, step through the following sequence to adjust the Setpoint values.

1. Press and release ENTER key.

   The Upper Readout starts flashing Control Setpoint value for Loop1. The front panel indicator SP1 flashes to indicate that the value shown on the Upper Readout is Control Setpoint for Loop1. The Lower Readout continues to show the measured Temperature value for Loop2.

   Press UP/DOWN keys to adjust the Control Setpoint value. Pressing UP or DOWN key once changes the value by one count; holding the key pressed speeds up the rate of change. The Upper Readout stops flashing as long as the UP or DOWN key is pressed for adjustment to avoid any obstructions in viewing.

2. Press and release ENTER key.

   The new value for the Control Setpoint for Loop1 is stored in the controller memory. The controller now enters either into step 3 or step 5 depending upon the selection for the Auxiliary Function for Loop1. If the Auxiliary Function for Loop1 is selected as 'None', the controller directly enters into step 5 else it enters into step 3.

3. The Upper Readout starts flashing Auxiliary Setpoint (Alarm, Blower or Auxiliary Control) value for Loop1. The front panel indicator AU1 flashes to indicate that the value shown on the Upper Readout is Auxiliary Setpoint for Loop1. The Lower Readout continues to show the measured Temperature value for Loop2.

   Press UP/DOWN keys to adjust the Auxiliary Setpoint value for Loop1.

4. Press and release ENTER key. The new value for the Auxiliary Setpoint for Loop1 is stored in the controller memory.

5. The Lower Readout starts flashing Control Setpoint value for Loop2. The front panel indicator SP2 flashes to indicate that

the value shown on the Lower Readout is Control Setpoint for Loop2. The Upper Readout now shows the measured Temperature value for Loop1.

Press UP/DOWN keys to adjust the Control Setpoint value for Loop2.

6. Press and release ENTER key.

The new value for the Control Setpoint for Loop2 is stored in the controller memory. The controller now enters either into next step (step 7) or returns to MAIN display mode depending upon the selection for the Auxiliary Function for Loop2. If the Auxiliary Function for Loop2 is selected as 'None', the controller returns to MAIN display mode else it enters the next step.

7. The Lower Readout starts flashing Auxiliary Setpoint (Alarm, Blower or Auxiliary Control) value for Loop2. The front panel indicator AU2 flashes to indicate that the value shown on the Lower Readout is Auxiliary Setpoint for Loop2. The Upper Readout continues to show the measured Temperature value for Loop1.

8. Press and release ENTER key. The new value for the Auxiliary Setpoint for Loop2 is stored in the controller memory and the controller returns to the MAIN display mode.

Repeat steps 1 through 8 each time to alter/view the Setpoint values for Loop1 and Loop2.

Notes:

1. It is a must to press the ENTER key after adjusting the Control/Auxiliary Setpoint, else the new value will not be registered / stored. The controller waits (approx. for 30 seconds) by flashing new Control/Auxiliary Setpoint Value. If the ENTER key is not pressed within wait time, the altered value will not be stored in the controller memory and the previous set value will be retained. Also, if the power failure occurs prior to pressing ENTER key, upon resumption of power, the controller will not store the altered value and retain the previous set value.
2. Upon adjusting the new Control Setpoint, the controller automatically enters into the Self-Tuning Mode (the Tune Indication, TN1 and TN2 for Loop1 and Loop2, respectively starts flashing if the “New Installation” condition is detected). Also, if the ‘Tune at Setpoint Change’ function is enabled in PAGE-11 parameter list, the controller automatically enters into the Self-Tunning Mode upon adjusting the Control Setpoint in the following conditions:

   i) The “Tune at Setpoint Change” condition is detected.

   ii) The Self-Tunning Mode is manually aborted while the Tunning is in progress.
3. The Auxiliary Setpoint value is available only if the Auxiliary Function is selected to other than None.
4. The Control and Auxiliary setpoint adjustments are permitted only if these are not locked via the parameter 'LOCK' in PAGE-11. The setpoint values, however, are always available for viewing regardless of the lock.
5. While in Operator Mode, the heater and auxiliary output statuses for both Loop1 and Loop2 are forced off to clearly indicate what the Upper or the Lower Readout is indicating.

Issuing Tune / Abort Command

The controller's 'X-PERT' algorithm is powered with the ability to self detect the events such as new installation, substantial change in Control Setpoint, etc. for tuning itself to the process under control for both the Loops. However, the user can issue separate Tune Command to each Loop to force itself and make an attempt to improve the already computed values of the constants used by the Loop control algorithm. Only under the following instances, the user should issue the Tune Command:

1. If for some reason the control accuracy / performance is not satisfactory.
2. If it is required to re-initiate the tuning procedure once the self-initiated tuning procedure was aborted by the user by issuing Abort Command.
3. There are substantial changes in the operating conditions such as change in load, heater size, etc., after the initial installation.

4. By the machine / equipment manufacturer at the time of dispatch to the end user. This is to ensure that the controller re-tunes for the new conditions such as running the machine with full load condition.

There are separate Tune / Abort commands for Loop1 and Loop2. Upon issuing Tune / Abort command, the respective Loop enters / exits the re-tuning procedure. Follow the steps below to issue Tune or Abort Command:

1. Press PAGE key. The Lower Readout shows PAGE and the Upper Readout shows 0.
2. Press ENTER key. The Lower Readout now shows either tUn.1 (if Loop1 is not already tuning) or Abt.1 (if the tuning for Loop1 is in progress) and the Upper Readout shows no (No).
3. Press UP key to select YES (Yes) on the Upper Readout to issue Tune / Abort command for Loop1. Press ENTER key to register the YES command. Upon pressing ENTER key, Loop1 enters / exits tuning operation depending upon the command issued. If Tune command is issued, the front panel indicator TN1 starts flashing to indicate that Loop1 has begun tuning operation. If, however, Abort command is issued, the flashing indicator TN1 turns off to indicate that Loop1 tuning operation is aborted.

   The Lower Readout now shows either tUn.2 (if Loop2 is not already tuning) or Abt.2 (if the tuning for Loop2 is in progress) and the Upper Readout shows no (No).
4. Repeat step 3 for issuance of Tune / Abort command for Loop2. The controller automatically returns to MAIN display mode upon pressing ENTER key.

Notes:

1. The Tune and Abort Commands are mutually exclusive. That is, the Tune Command is available only when tuning is not already initiated whereas Abort Command is available only while tuning is in progress.
2. While the tuning operation is in progress, the user is advised not to disturb the process or any parameter values of the controller under tuning. Upon completion of the tuning operation, the respective indicator (TN1 for Loop1 and TN2 for Loop2) turns off to indicate that the tuning operation is over.

The following tips can help user to decide when to issue Tune command.

1. In most applications, the controller is subject to dry run (without actual load conditions) by the machine manufacturer after its first installation on the machine. This is usually done to conduct tests / trails of the machine. It may then be desired that the controller automatically enter into re-tuning procedure while it is first run with full load conditions at the end user site. For this, it is best to issue the Tune command and switch off the controller prior to dispatch (thus, leaving the tuning procedure incomplete). The controller then automatically resumes the tuning when it is powered next time.
2. If it is found that the control results are not satisfactory (may be due to dynamic changes in the load conditions), it is best to issue this command while the process is being controlled near the Control Setpoint. This will cause small disturbances in the Temperature value while the controller is performing tuning procedure but shall eventually result in a stable control once the tuning procedure is complete.

TEMPERATURE VALUE ERROR INDICATIONS

In case, the measured Temperature value falls below the Minimum Range or rises above the Maximum Range specified for the selected input sensor or in case of sensor open / broken; the controller flashes the error messages as listed in Table 2.1 below. Note that the messages for Loop1 flash on Upper Readout while those for Loop2 flash on the Lower Readout.

Table 2.1

Message	Error Type
Or	Over-range (Temp. above Max. Range)
Ur	Under-range (Temp. below Min. Range)
S.brY	Sensor Break (RTD / Thermocouple is open or broken)
S.FLt	Sensor Fault (Incorrect sensor type or connections)

Notes:

1. In case of Over-range and Under-range condition, the Control Output and Auxiliary Output (if selected as Blower or Control) of the respective Loop is held at the minimum level, that is, OFF.
2. In case of Sensor break (open) condition; the control signal (% output power) will depend upon the Sensor Break Strategy selected in PAGE-11 parameter list that is commonly applicable for Loop1 and Loop2.
3. For 3-wire RTD sensor input, If the compensating lead (connected at rear panel terminal number 3) is not connected or gets open, the controller does not indicate PV error but the measured value is not compensated for the lead resistance.
4. In case Tunning operation is in progress, the controller automatically aborts the Tunning operation upon detecting the PV error condition.
5. If the Auxiliary Function is selected as Alarm for Loop1 and/or Loop2, the respective alarm gets activated in error conditions. Refer below, *Sub-section: Alarm Status Under Temperature Error Conditions.*

ALARM STATUS UNDER TEMPERATURE VALUE ERROR CONDITIONS

The Table 2.2 below summarizes the alarm status under various Temperature error conditions. The alarm ON status means the alarm is activated and OFF means the alarm is not activated. The corresponding Auxiliary output is energized / de-energized in accordance with the alarm status and control logic (Normal / Reverse).

Table 2.2

ERROR TYPE	ALARM TYPE	ALARM STATUS
Under-range	Process Low	ON
	Process High	OFF
	Negative Deviation	ON
	Positive Deviation	OFF
	Band	ON
Over-range or Open	Process Low	OFF
	Process High	ON
	Negative Deviation	OFF
	Positive Deviation	ON
	Band	ON

Section 3
PAGES & PARAMETERS

The various parameters are arranged in different groups, called PAGES, depending upon the functions they represent. Each group is assigned a unique numeric value, called PAGE NUMBER, for its access.

The parameters are always presented in a fixed format: The Lower Readout displays the parameter prompt (Identification Name) and the Upper Readout displays the set value. The parameters appear in the same sequence as listed in their respective sections.

SET-UP MODE

The Set-up Mode allows the user to view and modify the parameter values. Follow the steps below for setting the parameter values:

1. Press and release PAGE key. The Lower Readout shows PAGE and the Upper Readout shows page number 0. Refer Figure 3.1.
2. Use UP / DOWN keys to set the desired PAGE NUMBER.
3. Press and release ENTER key. The Lower Readout shows the prompt for the first parameter listed in the set PAGE and the Upper Readout shows its current value. (If the entered PAGE NUMBER is invalid (contains no parameter list or any associated function), the controller reverts to the MAIN Display Mode.
4. Press and release the ENTER key until the prompt for the required parameter appears on the Lower Readout. (The last parameter in the list rolls back to the first parameter).
5. Use UP / DOWN keys to adjust the parameter value. (The display flashes if UP key is pressed after reaching the maximum value or DOWN key is pressed after reaching the minimum value).
6. Press and release the ENTER key. The new value gets stored in the controller's non-volatile memory and the next parameter in the list is displayed.

The Figure 3.1 illustrates the example of altering the value for the parameter 'Input Type'.

Figure 3.1

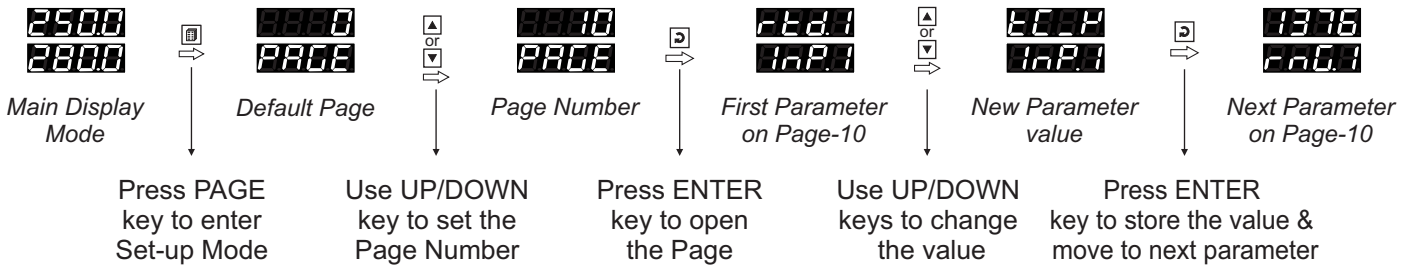

Notes

1. *Each page contains a fixed list of parameters that are presented in a pre-determined sequence. Note however that availability of a few parameters, called Conditional Parameters, depend upon the settings for some other parameters. For example, the parameter 'Control Hysteresis' for Output-1 is available only if, the set value for the parameter 'Control Action' is 'On-Off'.*
2. *To exit the set-up mode and return to the MAIN Display Mode, press and release PAGE key.*
3. *If no key is pressed for approximately 30 seconds, the set-up mode times out and reverts to the MAIN Display Mode.*

MASTER LOCKING

The controller facilitates locking all the PAGES (except Operator PAGE) by applying Master Lock Code. Under Locking, the parameters are available for *view only* and cannot be adjusted. The Master Lock, however does not lock the operator parameters. This feature allows protecting the rather less frequently used parameters against any inadvertent changes while making the frequently used operator parameters still available for any editing.

For enabling / disabling the Lock, step through the following sequence:

Locking

1. Press and release PAGE key while the controller is in the MAIN Display Mode. The Lower Readout shows PAGE and the Upper Readout shows 0.
2. Use UP / DOWN keys to set the Page Number to 123 on the Upper Readout.
3. Press and release ENTER key. The controller returns to the MAIN Display Mode with the Lock enabled.

The Figure 3.2 below illustrates the Locking procedure.

Figure 3.2

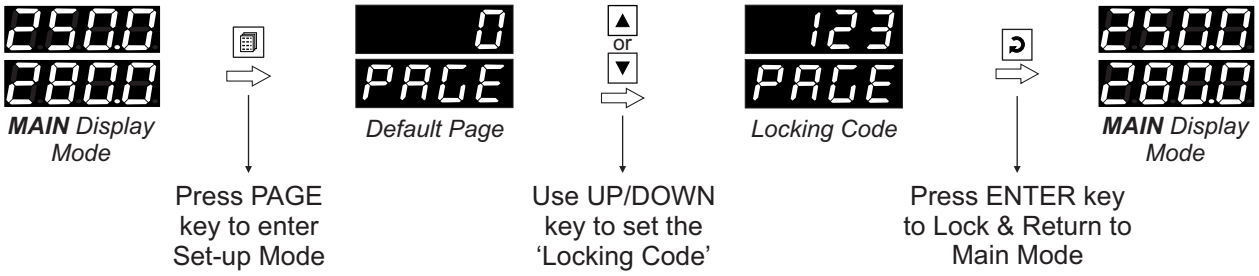

UnLocking

Repeat the Locking procedure twice for unlocking.

Section 4

PAGE-10 : INSTALLATION PARAMETERS

Table 4.1

Parameter Description	Settings (Default Value)
INPUT TYPE FOR LOOP1 InP.1 Refer Table 4.2 for various available 'Input Types' along with their respective Ranges and Resolutions.	Refer Table 4.2 (Default : Type K)
TEMPERATURE RANGE FOR LOOP1 rnG.1 This parameter value must be set in accordance with the Maximum Temperature Range for which the equipment /machine is designed.	Min. to Max. specified for the selected Input Type (Refer Table 4.2) (Default : 1376)
ZERO OFFSET FOR LOOP1 OFS.1 This value is algebraically added to the measured PV to derive the final PV that is displayed and compared for alarm/control. Final PV = Measured PV + Offset	-1999 to 9999 **or** -199.9 to 999.9 (Default : 0)
CONTROL ACTION FOR LOOP1 Ctr.1 Select appropriate Control Algorithm suited for process requirement.	PId PID On.OF On-Off (Default : PID)
HYSTERESIS FOR LOOP1 HYS.1 ***(Available for On-Off Control only)*** Sets differential (dead) band between ON-OFF switching for Loop1.	1 to 999 **or** 0.1 to 999.9 (Default : 2)
INPUT TYPE FOR LOOP2 InP.2 Refer Table 4.2 for various available 'Input Types' along with their respective Ranges and Resolutions.	Refer Table 4.2 (Default : Type K)

Parameter Description	Settings (Default Value)
TEMPERATURE RANGE FOR LOOP2 rnG.2 This parameter value must be set in accordance with the Maximum Temperature Range for which the equipment /machine is designed.	Min. to Max. specified for the selected Input Type (Refer Table 4.2) (Default : 1376)
ZERO OFFSET FOR LOOP2 OFS.2 This value is algebraically added to the measured PV to derive the final PV that is displayed and compared for alarm/control. Final PV = Measured PV + Offset	-1999 to 9999 **or** -199.9 to 999.9 (Default : 0)
CONTROL ACTION FOR LOOP2 Ctr.2 Select appropriate Control Algorithm suited for process requirement.	PId PID On.OF On-Off (Default : PID)
HYSTERESIS FOR LOOP2 HYS.2 ***(Available for On-Off Control only)*** Sets differential (dead) band between ON-OFF switching for Loop1.	1 to 999 **or** 0.1 to 999.9 (Default : 2)

Table 4.2

Option	What it means	Range (Min. to Max.)	Resolution (Fixed or settable)
tC_J	Type J Thermocouple	0 to +960°C	Fixed 1°C
tC_K	Type K Thermocouple	-200 to +1375°C	
tC_t	Type T Thermocouple	-200 to +385°C	
tC_r	Type R Thermocouple	0 to +1770°C	
tC_S	Type S Thermocouple	0 to +1765°C	
tC_b	Type B Thermocouple	0 to +1825°C	
tC_n	Type N Thermocouple	0 to +1300°C	
rtd	3-wire, RTD Pt100	-199 to +600°C	
rtd.1	3-wire, RTD Pt100	-199.9 to 600.0°C	0.1°C

Section 5

PAGE-11 : CONFIGURATION PARAMETERS

Table 5.1

Parameter Description	Settings (Default Value)
TUNE ON SP CHANGE tn.SP Re-tune the controller if there is a substantial (large) change in the SP value. The P, I, D values are optimized.	dSbL Disable EnbL Enable (Default : Enable)
OVERSHOOT INHIBIT ENABLE FOR LOOP1 O1 h.1 (For PID Control Mode only) Set this parameter to 'Enable' if the process exhibits unacceptable overshoot upon start-up or a step change in SP. If enabled, the controller controls the rate of change of PV to minimize overshoot.	dSbL Disable EnbL Enable (Default : Disable)
OVERSHOOT INHIBIT FACTOR FOR LOOP1 O1 F.1 This parameter adjusts the effectiveness of the Overshoot Inhibit feature. Increase the value if the overshoot is curbed but the PV takes longer to reach the SP. Decreases the value if the overshoot persists.	1.0 to 2.0 (Default : 1.2)
SENSOR BREAK OUTPUT POWER FOR LOOP1 Sb.O.1 *(Available for PID control only)* In case of Thermocouple / RTD broken or disconnected, the controller outputs this power value under open loop condition.	0 to 100 (Default : 0)
OVERSHOOT INHIBIT ENABLE FOR LOOP2 O1 h.2 Description same as for Loop1.	dSbL Disable EnbL Enable (Default : Disable)
OVERSHOOT INHIBIT FACTOR FOR LOOP2 O1 F.2 Description same as for Loop1.	1.0 to 2.0 (Default : 1.2)
SENSOR BREAK OUTPUT POWER FOR LOOP2 Sb.O.2 Description same as for Loop1.	0 to 100 (Default : 0)
SETPOINT LOCKING SP.LK This parameter allows the supervisor to control permission of editing various setpoints by the operator. This helps prevent any accidental changes or unauthorized tempering.	nonE None SP Control Setpoint AU.SP Auxiliary Setpoint ALL Both Control & Auxiliary Setpoint (Default : None)

Parameter Description	Settings (Default Value)
SLAVE ID Id This parameter assigns a unique identification number that the Master Device can use to address the instrument for data transactions.	1 to 127 (Default : 1)
BAUD RATE bAUd Communication speed in 'Bits per Second'. Set the value to match with the host baud rate.	4.8 4800 9.6 9600 19.2 19200 (Default : 9600)
PARITY PAr1 Parity setting for serial communication protocol	nonE None EuEn Even Odd Odd (Default : Even)
COMMUNICATION WRITE ENABLE Con.E *Yes* The Read/Write parameters can be accessed for both reading and writing. *No* The Read/Write parameters can only be accessed for reading. That is, the parameter values cannot be altered through serial communication.	no No YES Yes (Default : Yes)

Section 6

PAGE-12 : PID CONTROL PARAMETERS

Table 6.1

Parameter Description	Settings (Default Value)
OUTPUT POWER FOR LOOP1 POr.1 This is a view only parameter (can not be adjusted by the user) that facilitates the indication of % output power (0 to 100%) computed by the PID algorithm.	Not Applicable (for View Only) (Default : Not Applicable)
CYCLE TIME FOR LOOP1 Ct.1 (For 'PID' Control) For time-proportionating PID control, the output power is implemented by adjusting the ratio of ON : OFF to a fixed time interval, called 'Cycle Time'. The larger the power the larger the ON time and vice-a-versa. Larger Cycle time ensures longer Relay/SSR life but may result in poor control accuracy and vice-a-versa. *The recommended Cycle Time values are; 20 sec. for Relay and 1 sec. for SSR.*	0.5 to 120.0 Seconds (in steps of 0.5 Sec.) (Default : 1.0)
PROPORTIONAL BAND FOR LOOP1 Pb.1 (For 'PID' Control) The Proportional band is defined in terms of process value deviation from the setpoint (also known as process error). Within the band the output power is varied from maximum (100%) at maximum deviation to minimum (0%) at minimum deviation. The process value thus tends to stabilize at a point within the band where the power input equal losses. Larger Band results in better stability but larger deviation. The Proportional Band value is automatically calculated by controller's Self-Tune feature and seldom requires any manual adjustment.	1 to 999 °C 0.1 to 999.9 °C (Default : 100)
INTEGRAL TIME (RESET) FOR LOOP1 It.1 (For 'PID' Control) The application of proportional band alone results in process value stability within the band but away from the setpoint. This is called steady state Offset Error. The integral action is incorporated for automatic removal of offset error with minimum oscillations. The Integral Time value is automatically calculated by controller's Self-Tune feature and seldom requires any manual adjustments.	0 to 1000 Seconds (Default : 100)

Parameter Description	Settings (Default Value)
DERIVATIVE TIME (RATE) FOR LOOP1 dt.1 (For 'PID' Control) It is desired that the controller should respond to any dynamic changes in the process conditions (like variations in load, power supply fluctuations, etc.) fast enough so as retain the process value near the setpoint. The derivative time determines how strong the output power will change in response to the rate of change of measured PV. The Derivative Time value is automatically calculated by controller's Self-Tune feature and seldom requires any manual adjustments.	0 to 250 Seconds (Default : 25)
OUTPUT POWER FOR LOOP2 POr.2 Same as Output Power for Loop1	Not Applicable (for View Only) (Default : Not Applicable)
CYCLE TIME FOR LOOP2 Ct.2 Same as Cycle Time for Loop1	0.5 to 120.0 Seconds (in steps of 0.5 Sec.) (Default : 1.0)
PROPORTIONAL BAND FOR LOOP2 Pb.2 Same as Proportional Band for Loop1	1 to 999 °C 0.1 to 999.9 °C (Default : 100)
INTEGRAL TIME (RESET) FOR LOOP2 It.2 Same as Integral Time (reset) Loop1	0 to 1000 Seconds (Default : 100)
DERIVATIVE TIME (RATE) FOR LOOP2 dt.2 Same as Derivative Time (rate) for Loop1	0 to 250 Seconds (Default : 25)

Section 7

PAGE-13 : AUXILIARY OUTPUT-1 PARAMETERS

Auxiliary Output-1 is associated with Loop1.

Table 7.1

Parameter Description	Settings (Default Value)
AUXILIARY FUNCTION FOR LOOP1 AUF.1 Select the function / feature for which the Auxiliary output 1 is to be used.	nonE None ALrm Alarm CtrL Control bLOr Blower (Default : None)
Alarm Function Parameters for Loop1	
ALARM TYPE tYPE Select the Alarm activation type.	P_Lo Process Low P_Hi Process High dE Deviation Band bAnd Window Band (Default : Process Low)
ALARM SETPOINT SP *(Available for Process High or Process Low Alarm Type)* Sets Alarm limit independent of control setpoint.	Min. to Max. Range for the selected Input type (Default : 0)
ALARM DEVIATION BAND bAnd *(Available for Deviation Band Alarm Type)* Sets positive or negative deviation (offset) limit from control setpoint for High or Low Alarm activation, respectively.	-199 to 999 **or** -199.9 to 999.9 (Default : 3)
ALARM WINDOW BAND bAnd *(Available for Window Band Alarm Type)* Sets symmetrical positive and negative deviation (offset) limits from control setpoint for both High and Low Alarm activation.	3 to 999 **or** 0.3 to 999.9 (Default : 3)
ALARM LOGIC LoGC Select 'Normal' if Alarm is to activate an Audio / Visual alarm. Select 'Reverse' if Alarm is to Trip the system.	norm Normal rEv Reverse (Default : Normal)
ALARM INHIBIT Ihbt Set to Yes to suppress Alarm activation upon power-up or process start-up.	no No YES Yes (Default : Yes)

Parameter Description	Settings (Default Value)
Alarm Control Function Parameters for Loop1	
AUXILIARY SETPOINT SP Positive (+) or Negative (-) offset to Control Setpoint for defining Auxiliary Setpoint.	(Min. Range **-** SP) to (Max. Range **-** SP) for selected Input (Default : 0)
CONTROL HYSTERESIS HYSt *(Available for On-Off Control)* Sets a differential (dead) band between the ON and OFF states. Keep it large enough to avoid frequent switching of the load without losing the desired control accuracy.	1 to 999 **or** 0.1 to 99.9 (Default : 2 **or** 0.2)
CONTROL LOGIC LoGC *Normal* The Output remains ON for PV *below* Setpoint and OFF otherwise. *Reverse* The Output remains ON for PV *above* Setpoint and OFF otherwise.	norm Normal rEu Reverse (Default : Normal)
Blower Function Parameters for Loop1	
BLOWER SETPOINT SP Positive (+) offset to Control Setpoint (SP) for defining Blower Setpoint.	0 to 250 **or** 0.0 to 25.0 (Default : 0)
BLOWER HYSTERESIS HYSt Sets a differential (dead) band between the blower ON and OFF states.	1 to 250 **or** 0.1 to 25.0 (Default : 2 **or** 0.2)

Section 8

PAGE-14 : AUXILIARY OUTPUT-2 PARAMETERS

Auxiliary Output-2 is associated with Loop2.

The Parameters for Auxiliary Output-2 are the same as that for Auxiliary Output-1 except for one additional parameter (listed below) for selecting the output type as Relay or SSR in accordance with the order output type.

Table 8.1

Parameter Description	Settings
AUXILIARY OUTPUT-2 TYPE AOP.2 Select as per the hardware module fitted in accordance with the Ordering Code.	rLY Relay SSr SSR

Section 9
MECHANICAL INSTALLATION

OUTER DIMENSIONS AND PANEL CUTOUT

The Figure 9.1 shows the controller outer dimensions.

Figure 9.1

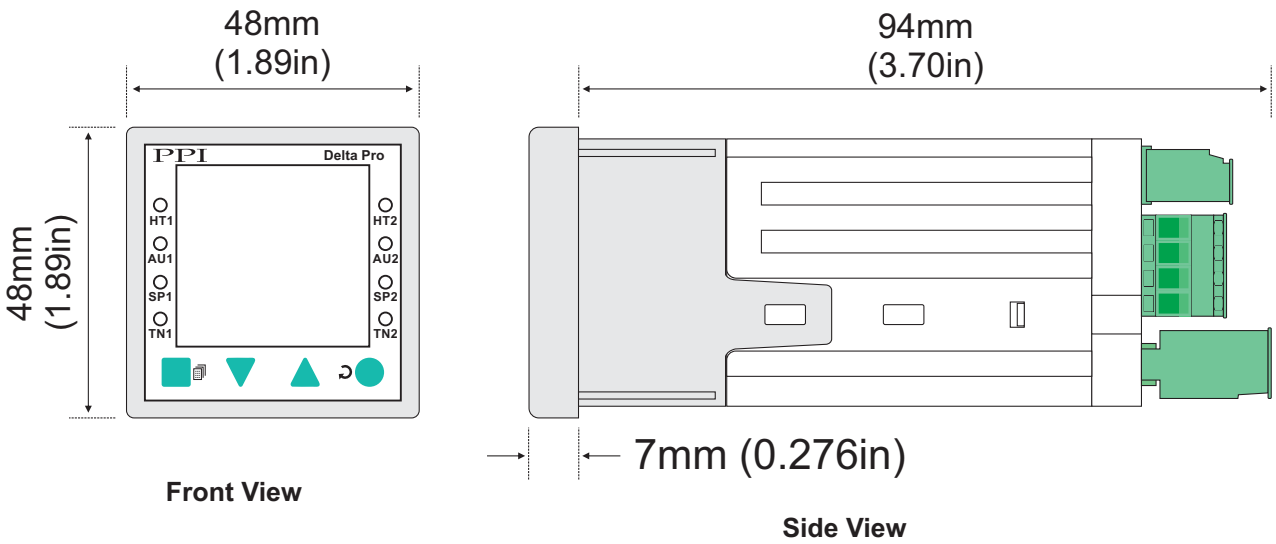

PANEL CUTOUT

The Figure 9.2 shows the panel cutout requirements for a single controller.

Figure 9.2

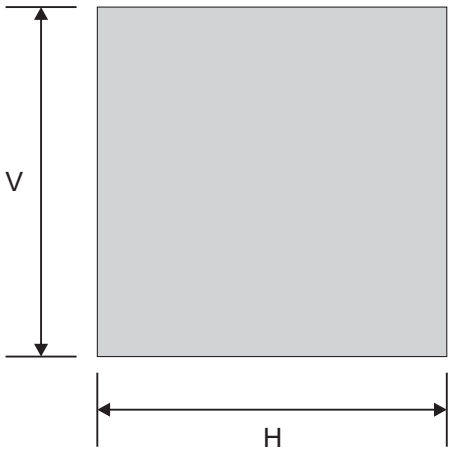

Parameter	Dimensions	
	mm	inches
H	45 (-0, +0.5)	1.77 (-0, +0.02)
V	45 (-0, +0.5)	1.77 (-0, +0.02)

PANEL MOUNTING

Follow the steps below for mounting the controller on panel:

1. Prepare a square cutout to the size shown in Figure 9.2.
2. Remove the Panel Mounting Clamp from the controller Enclosure and insert the rear of the controller housing through the panel cutout from the front of the mounting panel.
3. Hold the controller gently against the mounting panel such that it positions squarely against the panel wall, see Figure 9.3. Apply pressure only on the bezel and not on the front label.
4. Insert the mounting clamps on either side of the controller in the slots provided for the purpose. Rotate the screws clockwise so that they move forward until they push firmly against the rear face of the mounting panel for secured mounting.

Figure 9.3

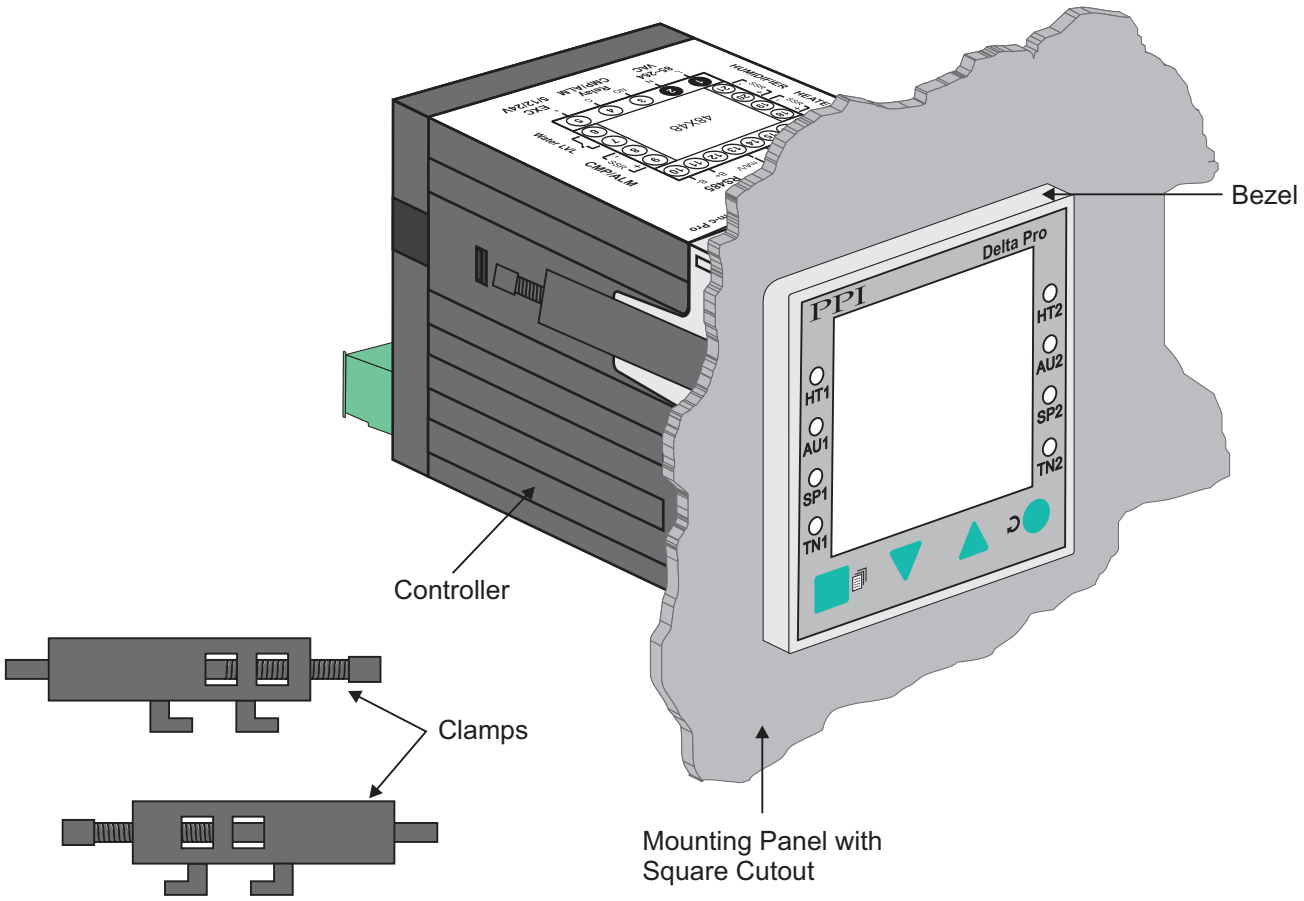

Section 10
ELECTRICAL CONNECTIONS

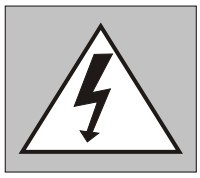

WARNING
MISHANDLING / NEGLIGENCE CAN RESULT IN PERSONAL DEATH OR SERIOUS INJURY.

1. The user must rigidly observe the Local Electrical Regulations.
2. Do not make any connections to the unused terminals for making a tie-point for other wires (or for any other reasons) as they may have some internal connections. Failing to observe this may result in permanent damage to the controller.
3. Run power supply cables separated from the low-level signal cables (like RTD, DC Linear (Voltage) signals, etc.). If the cables are run through conduits, use separate conduits for power supply cable and low-level signal cables.
4. Use appropriate fuses and switches, wherever necessary, for driving the high voltage loads to protect the controller from any possible damage due to high voltage surges of extended duration or short-circuits on loads.
5. Take care not to over-tighten the terminal screws while making connections.
6. Make sure that the controller supply is switched-off while making/removing any connections or removing the controller from its enclosure.

CONNECTION DIAGRAM

The Electrical Connection Diagram is shown on the top side of the enclosure. The diagram shows the terminals viewed from the REAR SIDE with the controller label upright. The connecters provided for wiring are pluggable male-female type. The female parts are soldered on the controller PCBs while the male parts are with screws and removable. The rear panel electrical wiring connection diagram is shown in Figure 10.1.

Figure 10.1

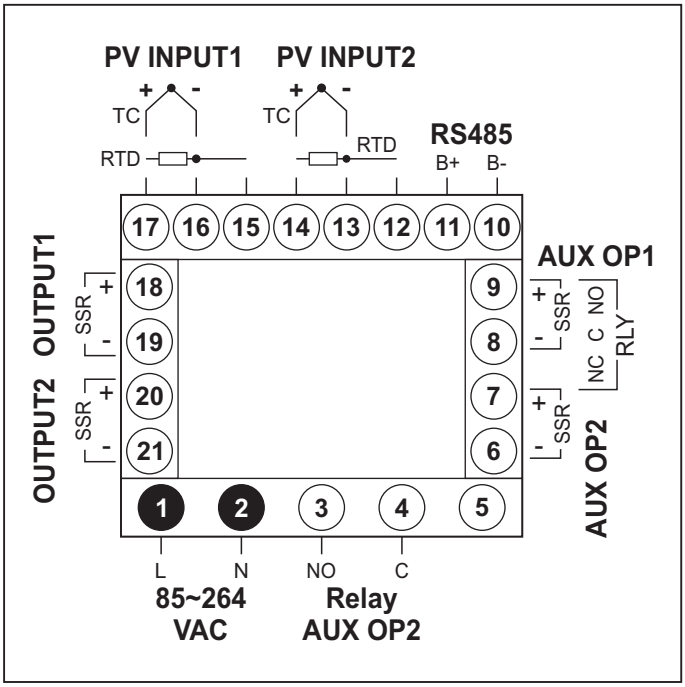

DESCRIPTIONS

The back panel connections are described as under:

PV INPUT1 : RTD Pt100, 3-wire / Thermocouple (Terminals : 17, 16, 15)
PV INPUT2 : RTD Pt100, 3-wire / Thermocouple (Terminals : 14, 13, 12)

Connect 3-wire RTD Pt100 sensor or Thermocouple as shown below.

Figure 10.2 (a) *Figure 10.2 (b)*

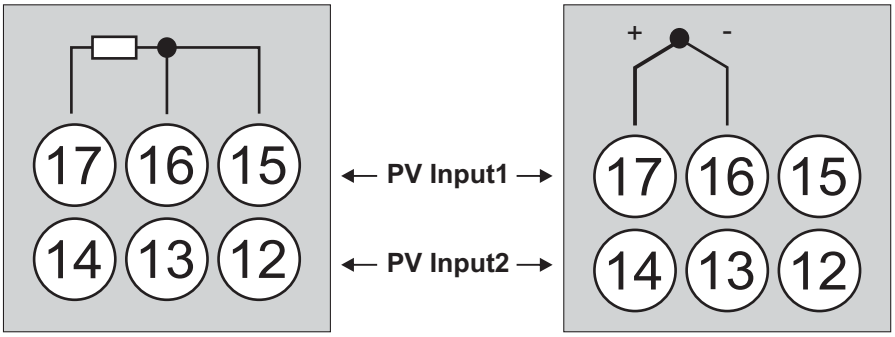

RTD Pt100, 3-wire **Thermocouple**

RTD Pt100, 3-wire
Connect single leaded end of RTD bulb to terminal 17 (14) and the double leaded ends to terminal 16 (13) and 15 (12) (interchangeable) as shown in Figure 10.2 (a). Use low resistance copper conductor leads of the same gauge and length. Avoid joints in the cable.

Thermocouple
Connect Thermocouple Positive (+) to terminal 17 (14) and Negative (-) to terminal 16 (13) as shown in Figure 10.2 (b). Use correct type of extension lead wires or compensating cable. Avoid joints in the cable.

OUTPUT1 :	Control Output - SSR	(Terminals : 18, 19)
OUTPUT2 :	Control Output - SSR	(Terminals : 20, 21)
AUX OP1 :	Alarm / Control - Relay Alarm / Control - SSR	(Terminals : 7, 8, 9) (Terminals : 8, 9)
AUX OP2 :	Alarm / Control - Relay Alarm / Control - SSR	(Terminals : 3, 4) (Terminals : 6, 7)

Figure 10.3

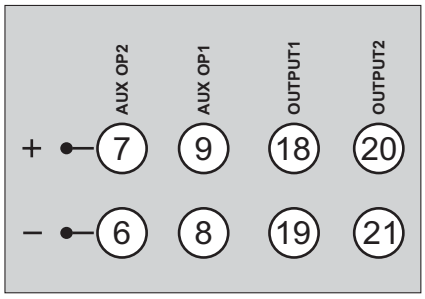

Output1/ Output2 / AUX OP1 / AUX OP2
SSR

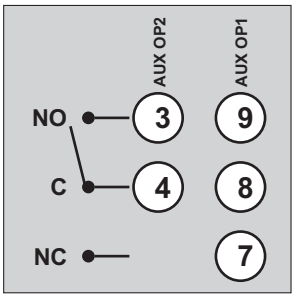

AUX OP1 / AUX OP2
Relay

Relay Output

Potential-free Relay changeover contacts NO (Normally Open) and C (Common) rated 10A/240 VAC (resistive load).

SSR Output

Connect (+) and (-) terminals of SSR to (+) and (-) terminals of controller, respectively. Use Zero-Crossover, 3 to 30 VDC operated SSR.

RS485 : Serial Communication Port (Terminals 10, 11)

Connect terminal 11 and 10 of the controller to (+) and (-) RS485 terminals of the Master device.

To ensure reliable operation of the Serial Communication Link (without data corruption due to line noise or reflections), use a pair of twisted wires inside screened cable with the terminating resistor (100 to 150 Ohms) at one end, as shown in Figure 10.4 below.

Figure 10.4

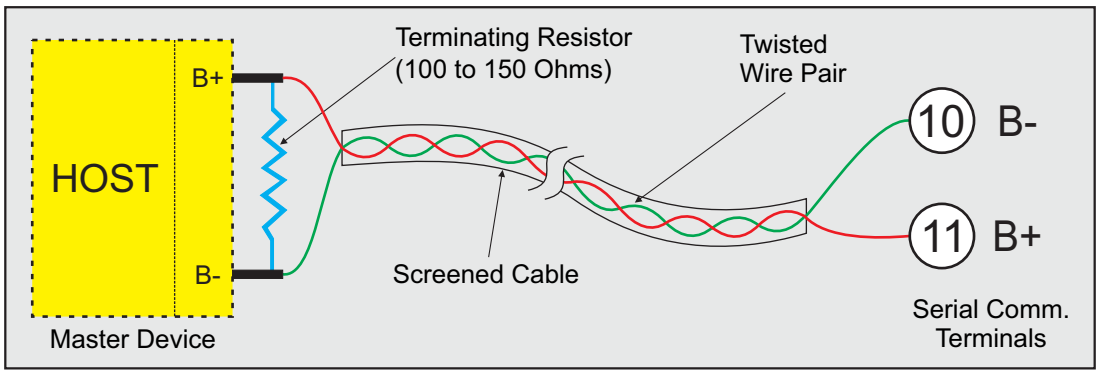

85~264 VAC : Power Supply (Terminals 1, 2)

The controller is supplied with power connections suited for 85 to 264 VAC line supply. Use well-insulated copper conductor wire of the size not smaller than 0.5mm^2 for power supply connections. Connect Line (Phase) supply line to terminal 1 and the Neutral (Return) supply line to terminal 2 as shown in Figure 10.5 below. The controller is not provided with fuse and power switch. If necessary, mount them separately. Use a time lag fuse rated 1A @ 240 VAC.

Figure 10.5

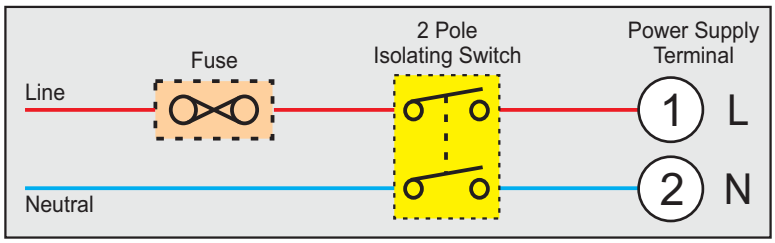

PPI

The Perfection Experts

Process Precision Instruments

101, Diamond Industrial Estate, Navghar, Vasai Road (E),
Dist. Palghar - 401 210.Maharashtra, India

Sales : 8208199048 / 8208141446

Support : 07498799226 / 08767395333

sales@ppiindia.net, support@ppiindia.net

Oct 2026

www.ppiindia.net