Refrigeration (Deep Freezer) Controller

PPI
The Perfection Experts

FrizCon 96

128 X 64 Monochrome Graphic Display
Single or Cascade Compressor Strategy
Auxiliary Analog Input for Coil / Filter Temperature
Compressor Control with Settable Time Delay
¼ DIN (96x96) Compact Enclosure

Process Precision Instruments
Vasai Road (E), Dist. Palghar - 401210,
Maharashtra, India

www.ppiindia.net

Salient Features

- 128 X 64 Monochrome Graphic Display for Comprehensive Process Information
- Two Analog Inputs (RTD Pt100, mA/V) for Cabinet Temperature & Coil / Filter Temperature Monitoring
- Single or Dual (Cascade) Compressor Control Strategy
- Compressor On-Off Control with Settable Time Delay
- Settable Time Delay between Cabinet & Cascade Compressor Switching
- SSR Drive (12 VDC @ 20 mA) Control Outputs
- Programmable Cabinet High-Low Temperature Alarms & Filter Safety Alarm
- Digital Inputs for Cabinet & Cascade Compressor HP/LP Faults
- Door Closure Monitoring with Status Indication & Alarm Output
- Auto/Manual Defrost Facility
- Built-in Audio Buzzer (Beeper) for Alarm Alerts
- RS 485 MODBUS RTU Serial Communication Port
- Universal Supply Voltage : 85 ~ 264VAC, 50/60 Hz
- Size (mm) : 96(H) X 96 (W) X 84 (D)

General Information

Product Type	Refrigeration (Deep Freezer) Controller (Single or Cascade Compressors)

Ordering Code

FRIZ96- ☐ - ☐

Excitation Voltage
1 : 5V **2** : 12V **3** : 24V
Default : 5 VDC

Supply Voltage
AC : 85~264 VAC (Default)
DC : 18 to 32 VDC

Example Code : FRIZ96-1-AC
Excitation : 5V
Supply Voltage : 85~264 VAC

Quantity	1 Unit
Accessories	(Optional) USB to RS485 Converter

Operator Interface

Display	128 X 64 Monochrome Graphic LCD (Black Font on White Background)
Keys	4 Tactile Switches PAGE, DOWN, UP, ENTER

Input Specifications

Cabinet Sensor (User Programmable)	RTD Pt100, 3 wire 0-20 mA / 4-20 mA 0-5 VDC / 0-10 VDC / 1-5 VDC
Coil / Filter Sensor (User Programmable)	RTD Pt100, 3 wire 0-20 mA / 4-20 mA 0-5 VDC / 0-10 VDC / 1-5 VDC *(Coil / Filter Sensor input is applicable for 'Single with Filter', 'Cascade with Filter', and 'Cascade with Coil' Operation Mode only)*
Accuracy	RTD Pt100 : ± 0.25% of reading ± 1 LSD DC mA / Volts : ± 0.20% of reading ± 1 LSD
Display Range & Resolution	Cabinet & Coil/Filter Temperature : -99.9 to 99.9°C (0.1 °C Fixed Resolution)
Zero Offset	User Adjustable over Full Range for Both Cabinet & Coil / Filter Temperature
ADC	16 Bit (± 32,768 Counts), Sigma-Delta (ΣΔ)
Input Resistance	> 8 MΩ for Pt100 > 47 KΩ for Voltage Input 249 Ω Precision Shunt for mA Input
Common Mode Rejection	> 100dB at 50/60 Hz
Input Protection	ESD : 8KV EFT : 2KV Surge : 1KV
Input Conditioning	First Order Analog R-C Low-Pass Filter & Settable Digital Low-Pass Filter

Excitation Voltage

Ratings (Factory Set)	5 VDC @ 15 mA (Standard) 12 VDC @ 15 mA (Optional) 24 VDC @ 50 mA (Optional)

Cascade Compressor HP / LP Monitoring

Input	Digital Input (Potential-free Contacts) from High + Low Pressure Switch *(This feature can be enabled / disabled by user)*
Function	Upon High / Low Pressure Fault both, Cascade & Cabinet compressors are switched-off for safety. The Compressors are switched-on again only after fault is removed and acknowledged.

Cabinet Compressor HP / LP Monitoring

Input	Digital Input (Potential-free Contacts) from High + Low Pressure Switch *(This feature can be enabled / disabled by user)*
Function	Upon High / Low Pressure Fault, Cabinet compressor (and also Cascade Compressor in case of Cascade Mode) are switched-off for safety. The Compressor(s) are switched-on again only after fault is removed and acknowledged.

Door Status Monitoring

Input	Digital Input (Potential-free Contacts) from Door Switch (can be enabled / disabled by user)
Function	Alarm Alert on Door Opening for Longer than Set Time

Alarm System

Process Alarm	Alarm on Cabinet Temperature crossing High / Low Limits
Filter Safety Alarm	Alarm on Filter Temperature exceeding High Limit
Cascade Compressor Pressure Fault Alarm	Alarm on HP / LP Fault
Cabinet Compressor Pressure Fault Alarm	Alarm on HP / LP Fault
Door Open Alarm	Alarm on Door Remaining Open for More than Set Time Period
Audio Alert	Built-in Buzzer (Beeper)
Output	SSR Output (12 VDC @ 20 mA, Short - Circuit Protected)
Alarm Acknowledge	Front Panel Alarm Acknowledge (Mute) on Enter Key

Temperature Control Loop

Type	ON-OFF with Compressor Switching & Cascade Switching Time Delays
Control Parameters	Control Band (Hysteresis)
Outputs	Separate SSR Drive (12 VDC @ 20 mA, Short - Circuit Protected) Outputs for Cabinet & Cascade Compressors

Serial Communication

Port	RS485, 2-wire, Half Duplex, Start-Stop Synchronized
Protocol	MODBUS RTU
Slave ID	Sattable : 1 to 127
Baud Rate	Settable : 9600, 19200, 38400 bps
Parity	Settable : None, Even, Odd
Max. Units per Loop	31
Max. Distance	1200 Meters

Power Supply

Type	Switch Mode (SMPS)
Line Voltage	85~264 VAC, 50/60Hz
Consumption	5 VA Max

Physical

Mounting	Plug-in with Panel Mounting Clamps
Overall Dimensions	96(H) X 96(W) X 84(D), mm
Panel Cutout	92(H) X 92(W), mm
Terminals	Screw Type
Weight	400 gm, Appx.

Environmental

Operating Ambient	0 to 55°C & 5 to 90%RH Non-condensing
Storage Temperature	-10 to +70°C
Atmospheres	Not Suitable for use in Corrosive or Explosive Atmospheres. The Panel in which the Instrument is Mounted must be free of Electrically Conductive Pollution.

Compressor Operation Mode

- Measured Temperature
- Temperature SP
- Compressor Switch-ON Level
- Compressor Switch-OFF Level

Single Compressor

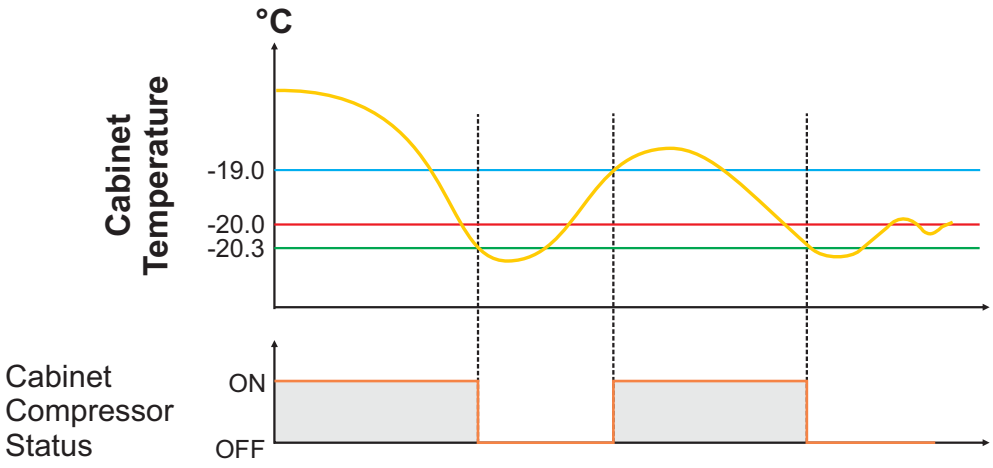

Temperature SP = -20.0°C
Compressor On Offset = 1.0°C
Compressor Off Offset = 0.3°C
Compressor Switch-ON Level = -20.0 + 1.0 = -19.0°C
Compressor Switch-OFF Level = -20.0 - 0.3 = -20.3°C

Cascade Compressors (without Coil Sensor)

Note : For the clarity sake, the *Compressor On-to-Off Time Delay* is not shown in the figure.

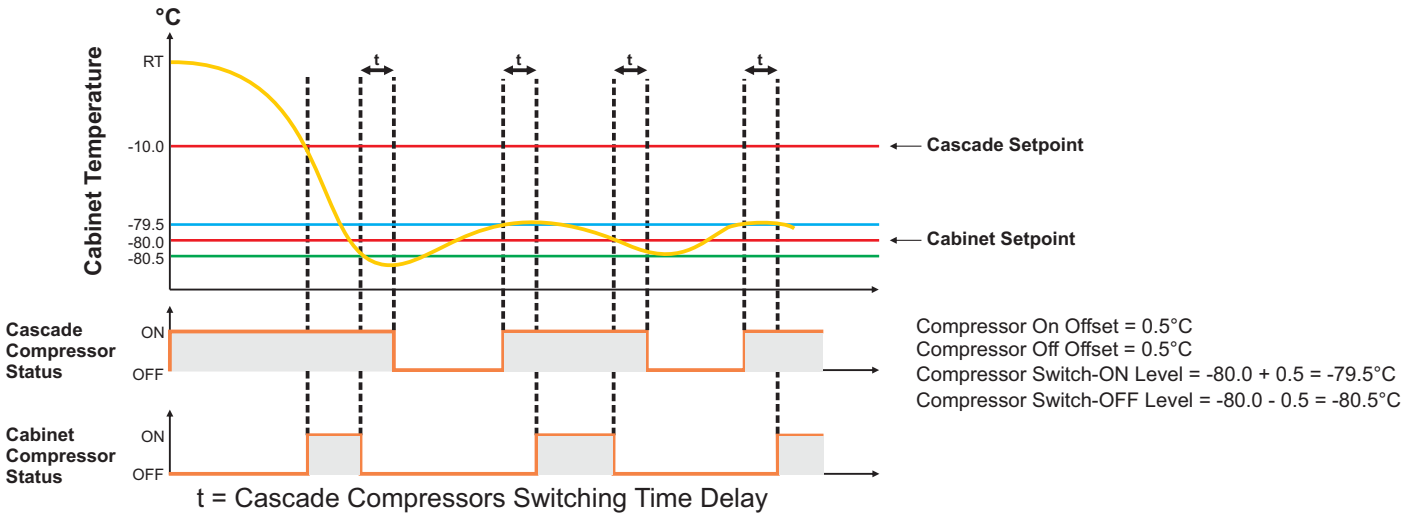

Note : The setpoint values shown in above figure are for illustration purpose only.

Cascade Compressors (with Coil Sensor)

Note : For the clarity sake, the *Compressor On-to-Off Time Delay* is not shown in the figure.

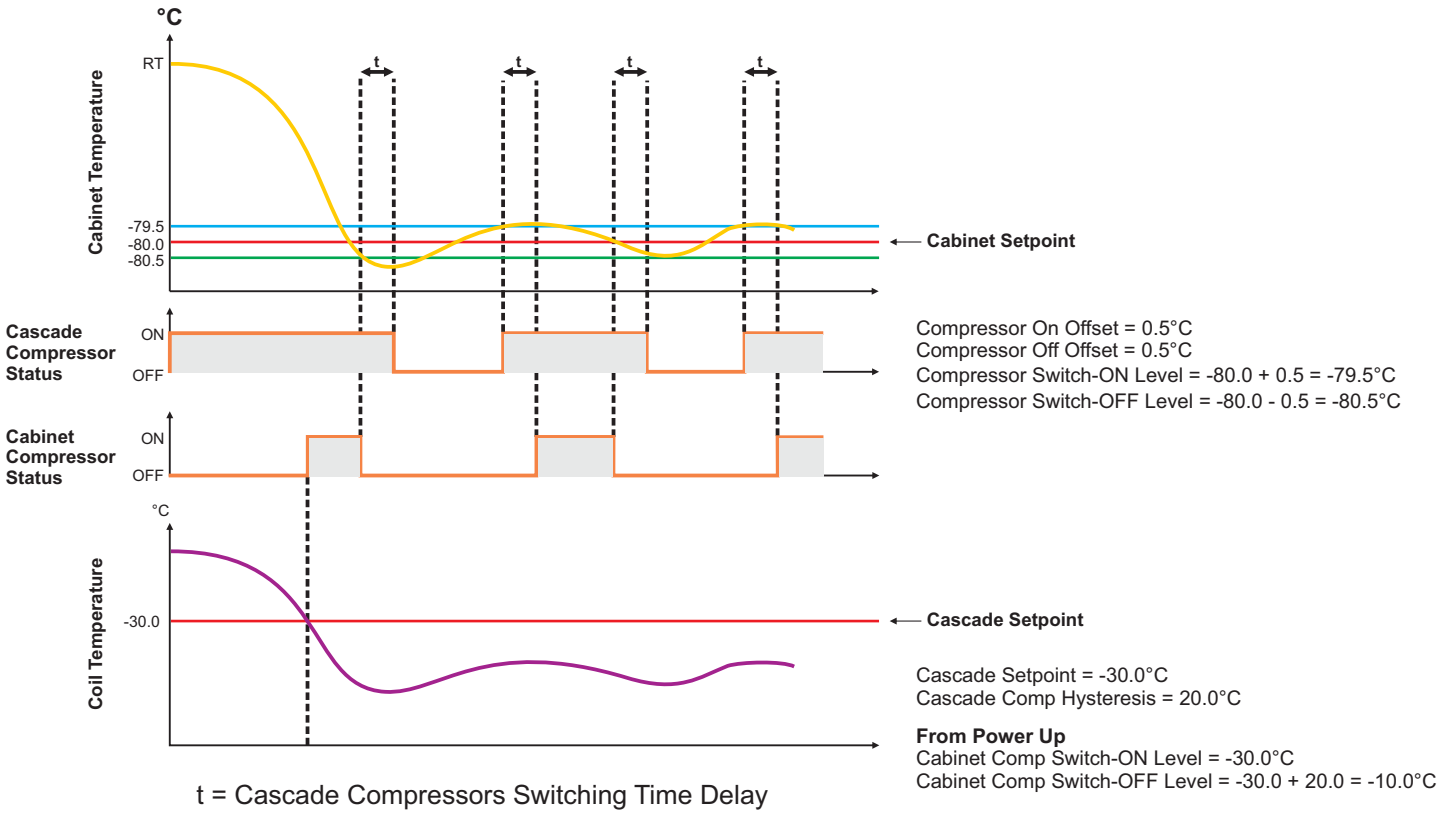

Note : The setpoint values shown in above figure are for illustration purpose only.

Back Panel Terminations

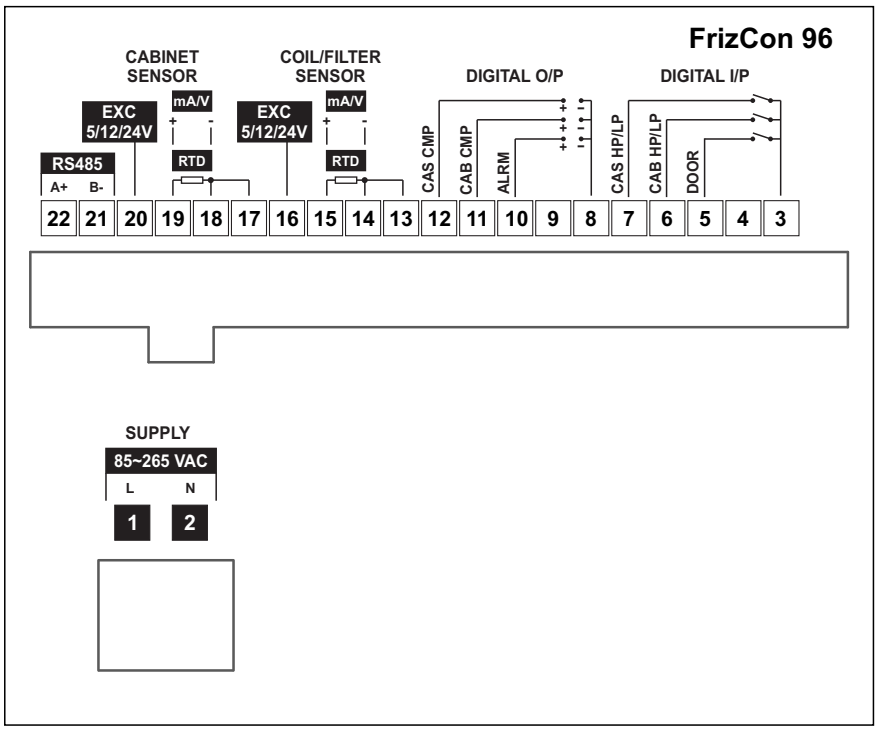

Process Precision Instruments (An ISO 9001 : 2008 Company)
101, Diamond Industrial Estate, Navghar, Vasai Road (E), Dist. Palghar - 401210, Maharashtra, India
Sales : 8208199048 / 8208141446 Support : 07498799226 / 08767395333
sales@ppiindia.net www.ppiindia.net